railroads fluctuate in value just as the thermometer goes up or down. They cost for construction, but their value exists chiefly in the summer time.

Note this variation from all the above. The cost of a railroad between two great cities is less if it can make a bee-line or avoid tunnels; but the less it costs and the shorter the distance it runs, the greater is its value.

These illustrations give an idea of what a task is "intangible" valuation.

Who shall decide whether Iowa railroads have gone down in value and how much by the decline in population in the last decade?

Michigan railroads were stated by Michigan officials to have $35,814,043 worth of this foggy something belonging to them in 1900; but Wisconsin on the other hand credits no intangible value at all to its railroads.

The State of Washington credited the Northern Pacific with 1 per cent intangible value above cost of reproduction of the railroad, but New Jersey adds 20 per cent or $75,841,600 and then deducts 20 per cent for depreciation (which is an absolutely unhaltable process) and so there you are; the value of New Jersey railroads is just what it cost to bring them into existence.

Minnesota sees no "intangible" values; neither did Massachusetts when it was trying to get at the value of the New Haven road.

### Earning Power as Test.

Now let us see how the complications multiply beyond all the above. The value at which a railroad should be marked if in the market for purchase is its earning power; just as the value of a horse lies in what it can earn and not in the direction it may be headed.

But two lines of equal cost would not necessarily have equal value, for an old "going" line has more value than a new one just developing its territory.

Then into the puzzle comes the value of strategic position, for instance, the stretch of rails between the Harlem Bridge and the Grand Central Depot, over which the New Haven must pass. The privilege of passing over this strategic stretch is figured away up in the millions.

Piling a little more on the problem: The depreciation question has the railroads themselves in doubt, and how can a remote commission decide this for 40 per cent of all the railroad trackage of the world? Some railroads wear out quicker than others. Ties are always decaying. Kansas ties are only valued at 56 per cent of their cost. The far-South tie in its moisture will not live as long as the Arizona tie in its dryness, but on the other hand, Southern tracks will not have to be constantly moved or lifted to keep up with encroaching sands. Every mortal device grows old; some things on a railroad age out and some wear out, but when they are out they are out and unless replaced there is no railroad.

Depreciation must everlastingly be emphasized, for it is the one factor that is always active; and efficiency consists in supplying material for it to gnaw away, but whether it is 20 per cent or 10 per cent or 5 per cent it is only possible to tell after replacement; for one year may wear hard and another lightly; for instance, the Baltimore and Ohio had $4,000,000 worth of equipment loss in the floods of last spring.

### Differences in Construction.

Now going one step farther back—to construction. It is self-evident that such a road as the Union Pacific, from Omaha westward across Nebraska, was little more than a matter of laying ties on a gradual rise; but the way across the Sierra Mountains in California was one to test men's every device and capacity. All these differences this great task involves.

A thousand other complications could be ranged in rows and then not exhaust the list. But passing back to the very first item in railroad building—the right of way—it must be realized that in many cases the right of way acreage costs two and one-fourth to two and one-half times as much as the value of the land it touches. But to duplicate now at two and one-fourth times present values would be prohibitive, and yet such pos-

sibilities of reproduction have to be reported on; which is reporting on something purely imaginative and quite useless except for technical argument and increasing technical employment.

The last question should really be first: What is this valuation for? It is to find a supposed scientific basis for railroad rates—both passenger and freight. This cannot be done by the means proposed, for this contradiction is visible—if a passenger rate is rightly low in a crowded territory where prosperity flourishes, then a rate ought to be high where the population is sparse and poor and journeys necessarily long. Yet from the pocket-book point of view the crowded region could stand high rates better than the thin region.

## Atlanta Veterans

The interior of the Frisco's office at Atlanta, Kans., is shown in the accompanying reproduction. To the right may be seen Agent J. E. Jones, who has been employed in the station department of the Frisco on the Kansas and Western Divisions for

the last twenty-four years. To the left is Operator J. O. Jones, who has been with the company about four years.

## Safety Lock

C. B. Collins, agent, Bentley, Kans., has invented the Collins' Safety Lock for platform trucks.

This lock works automatically. When the tongue of the truck is up

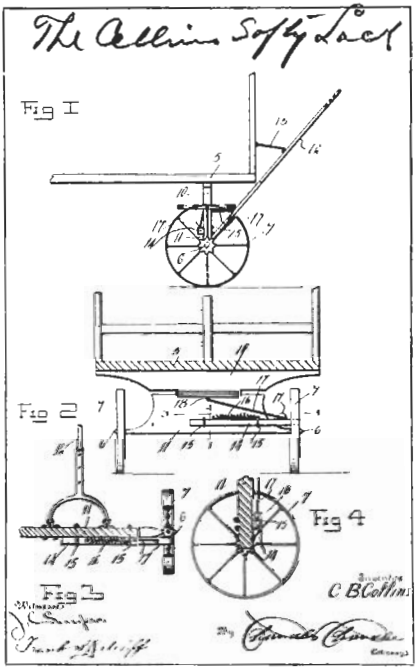


the spring forces the shaft between the spokes of the wheel, making it immovable, but when the tongue is lowered to move the truck the shaft is withdrawn, allowing the wheel to turn.

## Whistle—Just Whistle

When your heart is sad and the world is glum,
Whistle—that's all—just whistle!
Pretend you're a fife—though you have no drum—
And whistle—that's all—just whistle.

# Women's Department

*MRS. E. G. NEWLAND, Augusta, Kansas, Editor*

We have a book written by T. S. Arthur, entitled, "What Can Woman Do?" It is the story of the influence of two women from babyhood to grandmotherhood, one for good, the other for evil. Both were wives and mothers. One was the means of breaking up her home, the other saved her husband from ruin.

In history we find recorded the tremendous influence of woman in national affairs, as well as in the home. The names of Elizabeth, Joan of Arc, Nancy Hanks Lincoln and many others are household words, as are Cleopatra, Bloody Mary and Lucretia Borgia.

Many of our great men have attributed their success to some woman and some have said, "All I am I owe to my mother," wife or sister.

Too many women do not realize their possibilities. No matter how hedged about your life may be, there is always something you can do and if you do one thing well, it is better than to so scatter your energies that they do not amount to anything anywhere.

If you have children, you have a life-work. If you never do anything else, you can educate the children as far as you are able, and instill in their minds while they are young, the desire to be and do something worth while. You can begin their education while they are still clinging to your dress, with the beautiful stories which have been handed down to us and of which the children never tire. You can educate them in right living by keeping the atmosphere of the home pure and clean. Do you know that everyone has an atmosphere? I have met people whose very presence breathed wholesome sweetness and who seemed like the "shadow of a rock in a weary land." There was a magic something in the personality that soothed the turbulent spirit and rested the tired nerves. These are the people who have realized the depth and fullness of life, who have suffered and fought,—and conquered. They have come to know the truth of Anna Robertson Brown's essay, "What is Worth While," in which she says: "The Eternal Life is serene. It is not careworn, nor knows it any foreboding of future ill. Can we not take to ourselves its large spirit of serenity and cheer? We may let go discontent. In all the eternal years there is no word of murmur from any restless heart. In its vast silences how trivial would sound the complainings of our harassed days!"

I am speaking now to all the Frisco women. No two of us are just alike. No two of us have the same ambitions, the same ideas of pleasure or of what is worth while. But I do not doubt we can all make our lives count for more than they now do. To those of us who have always been "dreamers of dreams," I would say, do not give

up your dreams, but put them into action and make them come true. It may seem a long hard road and the difficulties be almost insurmountable, but hold on and work and hope and there can be but one outcome. Do not be discouraged because of the circumstances surrounding you. It may seem impossible to realize your ambitions in your present environment, but Carlyle says, "The situation that has not its duty, its ideal, was never yet occupied by man. Yes, here, in this poor miserable, hampered, despicable actual, wherein thou even now standest, here or nowhere is they ideal; work it out therefrom, and working believe, live, be free. Fool! the ideal is in thyself, the impediment, too, is in thyself; thy condition is but the stuff thou art to shape that same ideal cut of, what matters it whether such stuff be of this sort or that, so the form thou give it be heroic, be poetic? O thou that pinest in the imprisonment of the actual and criest bitterly to the gods for a kingdom wherein to rule and create, know this of a truth: the thing thou seekest is already within thee, here or nowhere, couldst thou only see." I know whereof I speak, for in my own life I have proved true these things.

To those women, if there be any in the Frisco family, whose eyes are, figuratively speaking, always fixed upon the ground, I would say, "Look up!" There is always God's blue sky above you, His sunshine surrounding you and the moon and the stars to lift the heart and the mind from the sordid cares of life. If you do not care for books—the best books—cultivate a taste for them and you will be surprised at the unguessed pleasures life holds. Sometimes I get up in the morning and my heart fairly sinks into my shoes when I think of the hard day's work ahead of me. But I take five minutes' time, sit down and read an especially fascinating chapter from "The Tale of Two Cities," or "Les Miserables," or a favorite poem from Browning or Riley. Then while my hands are doing the tasks I so much dreaded, my mind is "far afield" and the day is a red letter day, for it has been spent with the master minds of the world.

I have spoken of tne person whose atmosphere was a blessing to all those who come within its radius. There are also people who are surrounded by a deadly miasma. It chokes all the good impulses and makes us wish to get as far from them as possible. They are fond of repeating malicious gossip and shady stories and life and love and all the things we had thought

Sapulpa, Okla.,
Sept. 20, '13.

To the Chairman of Central Safety Committee:

There is nothing in print pertaining to public utilities that appeals so forcibly to the employer and employe as "Safety First."

It brings to the employer higher dividends on the investment and better salaries to the employes also causes less heartaches in the home and happiness around our fireside.

MISS ALYCE ROBERTSON,
Daughter of Engr. J. F. Robertson, Red River Division.

so beautiful assume a vulgar, depressing and sordid aspect.

What is your atmosphere? Let us determine to make it one of purity and strength. Let us get a broader outlook and realize more fully that, "No one liveth to himself," but that we have a power for good or evil and an influence the bounds of which we cannot guess. To some of us the Safety First idea does not seem of much importance, or seems unreal or far away, and not a vital part of our lives. But let us hold it off and look at it fairly and realize that we are a cog in the machinery and that only through the perfect working of every part can we obtain a perfect whole. We can all do something and by our thought for our loved ones and those of our sisters in this big Frisco family, our own lives will be sweeter and our outlook broader.

---

I would like to have letters from the women telling how they are aiding Safety First. Some of the ways may be new to other women, and we can help each other in this way. Do you talk of the movement in your home, and keep posted on the progress we are making? I will endeavor to tell you each month something that has been done since the last issue of THE FRISCO-MAN, and it will help us in our efforts if we know what someone else has done. I have given you this month a report from the Kansas Division, of the committee and its work.

Do you explain Safety First to your neighbors, who are not railroad people and thus aid in educating the traveling public? If you have never done so, just try it and see how many people you will find who will not even know what you mean when you say Safety First.

If you are not doing anything—get busy, so you will have something to write.

I appreciate the interest already manifested in the new department, which has been shown by the articles contributed and the cordial letters received from the contributors. I am especially glad of the pictures, which add so much to the attractiveness of the department and hope we may have a few every month. Our cosy corner is nicely launched now and I trust every Frisco woman will rally to our standard—SAFETY FIRST—and aid in making it a success.

---

Mrs. E. G. Newland, editor of the Women's Department, who attended the meeting of the Kansas Division Safety Committee, at Neodesha, Kans., October 3, has the following to say regarding the meeting:

I wish it was possible for every employe and every Frisco woman to be present at a meeting of this kind. I am positive it would arouse your enthusiasm to such an extent that wonderful impetus would be given the Safety First cause.

The meeting was called at eleven o'clock, with Superintendent Brown, chairman, occupying the chair.

We listened to the record made in the reduction of personal injuries during the three months ending August 31, 1913, as compared with the corresponding months in 1912. This was decidedly encouraging as the gain on the various divisions ranged all the way from seven to fifty-eight per cent; a total decrease in persons killed of thirty-three per cent and injured thirty-seven per cent.

The merits of the defective car card were discussed and plans made for a more thorough checking system.

A little after twelve o'clock the meeting was adjourned for lunch. At one thirty business was resumed. The